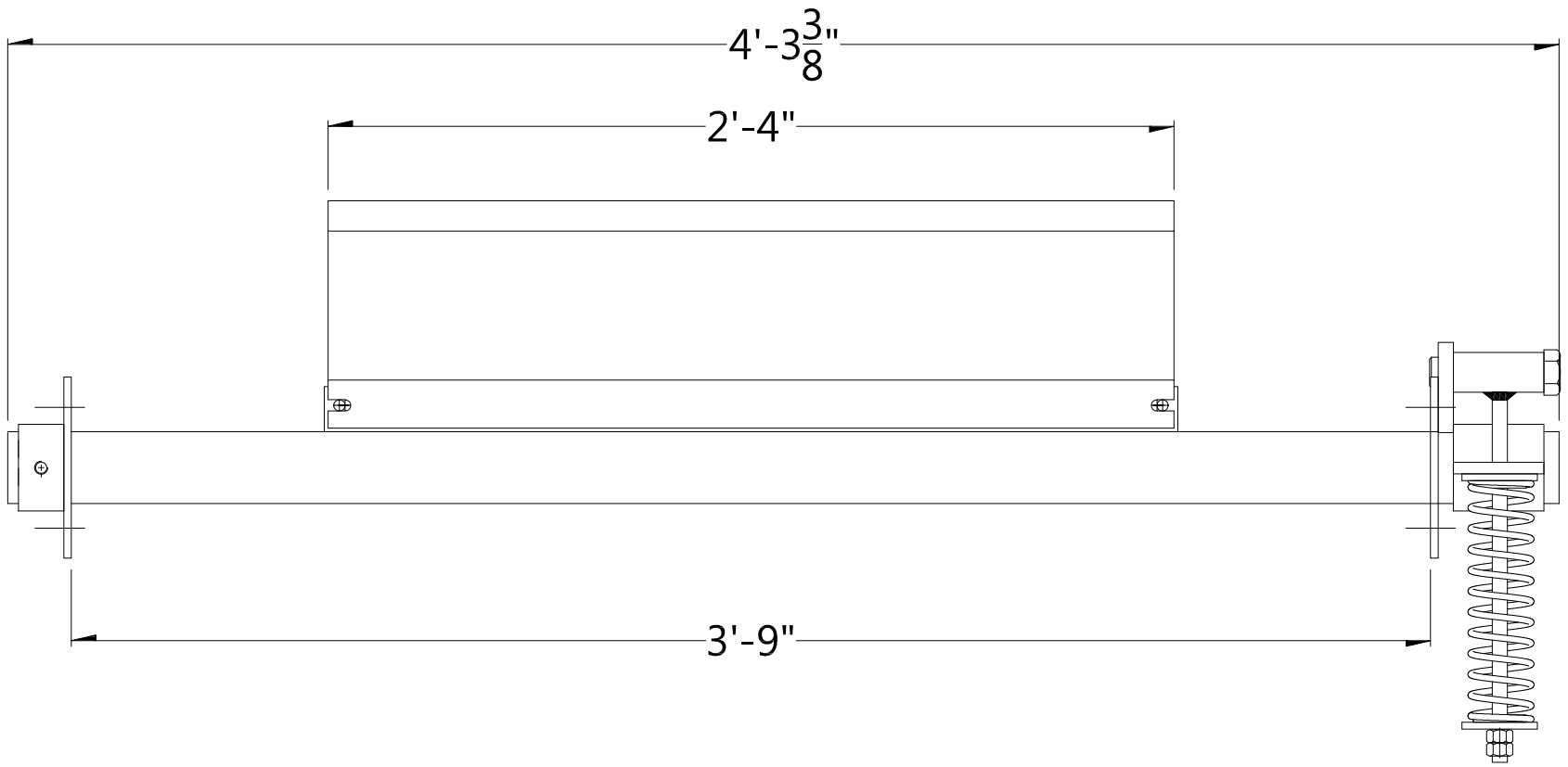


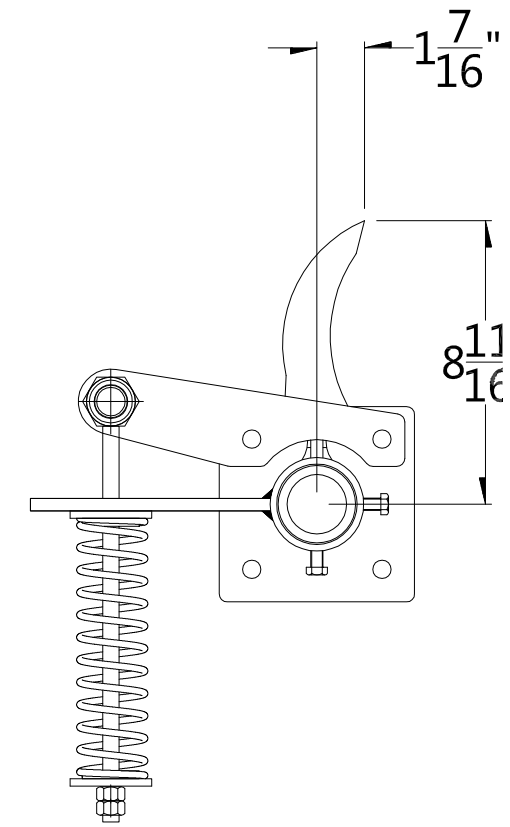


TOLERANCES A MOINS DE SPECIFICATIONS CONTRAIRES.
LIMITS, UNLESS OTHERWISE, NOTED.

| | | | | | |
|---|---|---|---|---|---|
| FRACTIONNELLE | 0° @ 120° ±1/16° | DECIMAL | .XXX ±.005" | ANGULAIRE | ±1/2° |
| FRACTIONAL | 120° & + ± 1/8° | | .XX ±.03" | ANGULAR | |

CE DESSIN EST CONFIDENTIEL ET NE DOIT PAS ETRE REPRODUIT
OU UTILISE SANS CONSENTEMENT DE SIMAR-DACON INC.

THIS DRAWING IS CONFIDENTIAL ANS MUST NOT REPRODUCED
OR USED WITHOUT THE CONSENT OF SIMAR-DACON INC.

PLASTHANE
Beloeil, Quebec, Canada,
Tél: (450) 464-9988
Fax: (450) 446-2378

Client
Customer —

Projet
Project —

Echelle
Scale N/A

Unite
Unit RACLEUR XL
XL SCRAPER

Dessin/Dwg No:
RACLEUR_XL

Feuille No:
Sheet No: 1 / 1

| Dessine par: Drawn by: | | Date | Verifie par: Checked by: | Date | Rev. |
|---|---|---|---|---|---|
| DM | B | 2013/12/03 | | | — |